1209 Swift St. N. Kansas City, MO. 64116
816 421-4956 FAX 816 582-4958
Email: badgerord@aol.com web site: www.badgerordnance.com

Use of the 1005-222-04 Timing Gage
for use with the U.S. M1 Rifle.

CAUTION: This Gage can be used by anyone to check a rifle, but service should be performed by a qualified person familiar with the operation and function of the M1 Service Rifle.

1. MAKE CERTAIN THE WEAPON IS UNLOADED!
2. With the rifle UNLOADED and the safety off (Fire position), Lock the Bolt open and lay the rifle on it's left side with the top of the action facing the operator.*(fig. 2)*
3. Insert Gage in top of action as you would a ammunition clip (no live ammunition is to be present durring this test), the bolt must not release before the"A" limit is reached.*(fig. 3)*
4. Continue to push the Gage to the "B" limit, *(fig. 4)* the bolt should close before the Gage stops.
5. If the rifle failed the test (Bolt closed to early or failed to close) replace the parts listed below one at a time, and re-test the rifle until it passes. In worst case scenarios it may require the replacement of two or more parts.

Replace these parts in the following order

Bullet Guide

Follower Rod

Follower Arm

Operating Rod Catch

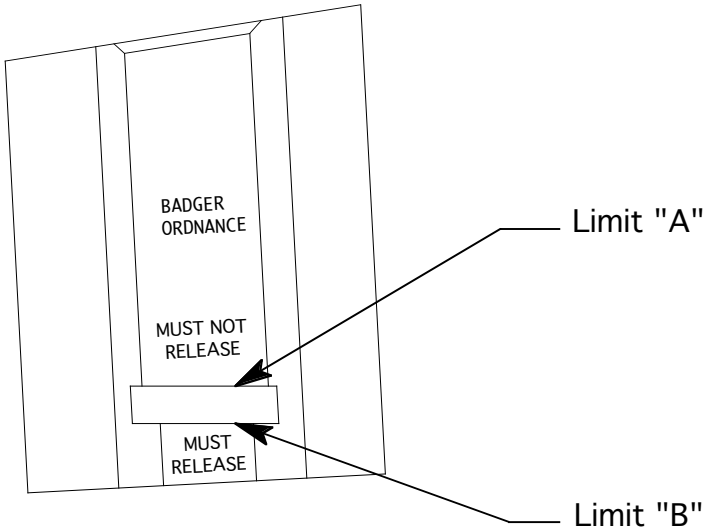

fig. 1

This product is sold "as is" and without any warranty. No liability is expressed or implied for damage or injury which may result from the improper installation or use of this product.

© Badger Ordnance 2011

fig. 1

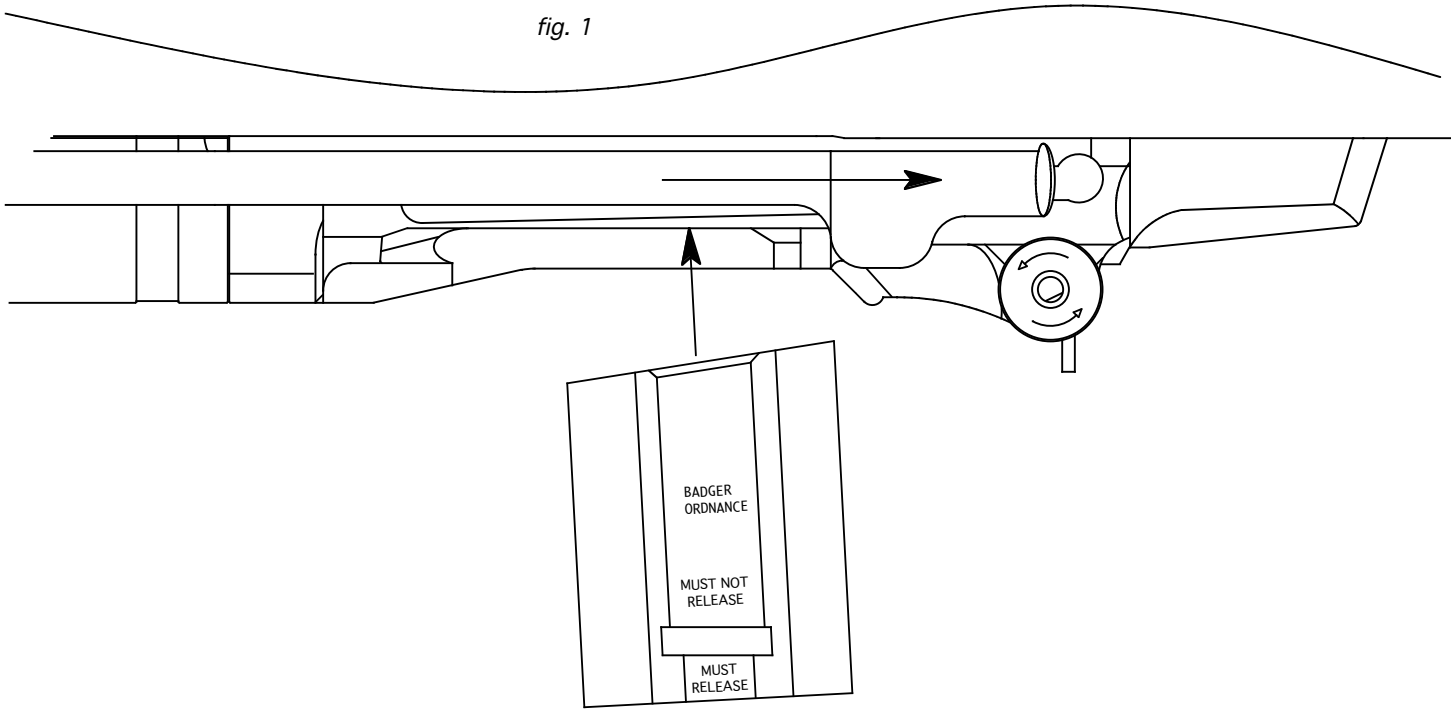

fig. 3

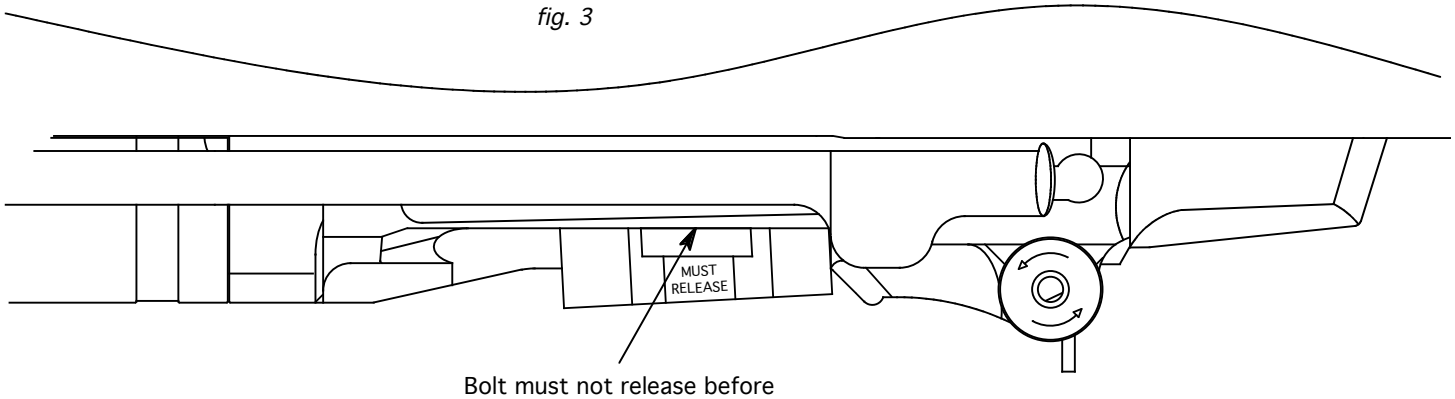

Bolt must not release before
gage reaches Limit "A".

fig. 3

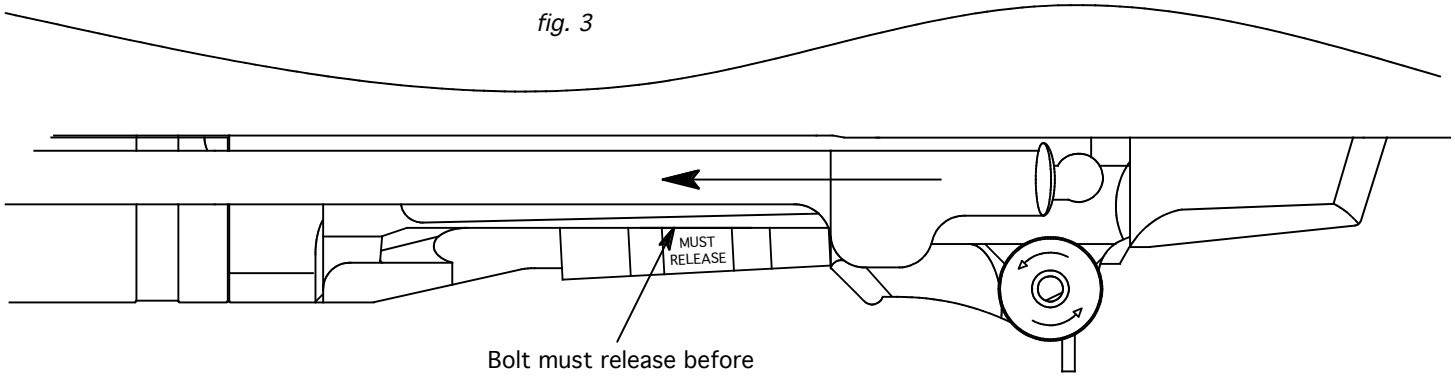

Bolt must release before
gage reaches limit "B".